# Inspection Methods with Modulated-Energy X-ray Pulses

***Anatoli Arodzero***
***RadiaBeam Technologies LLC, Santa Monica, CA***
***arodzero@radiabeam.com***
***310-822-5845, ext. 181***
***818-823-7860 - mobile***

This work has been partly supported by the US Department of Homeland Security, Domestic Nuclear Detection Office, under competitively awarded contracts HSHQDC-13-C-B0019, HSHQDC-15-C-00032, HSHQDC-15-C-B0022 and HSHQDC-15-C-B0025. This support does not constitute an express or implied endorsement on the part of the Government.

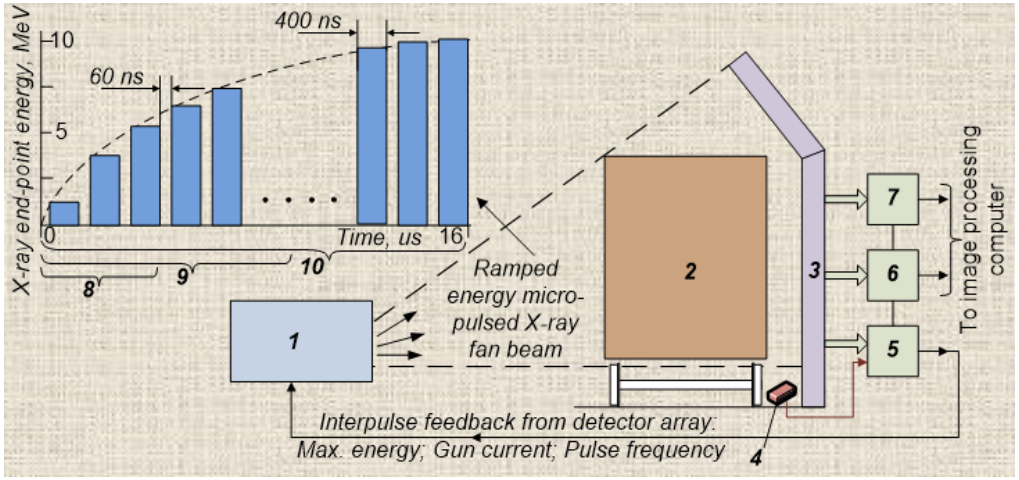


***Advanced Development for Security Applications Workshop***
***Custom and Border Protection (ADSA-CBP-01)***
***June 20-21,2018***

# The Key Advantages of Modulated-Energy Methods

The technique with modulated-energy X-ray pulses can be used in high energy transmission systems, in backscatter imagers, and in CT inspection systems.

- In high energy cargo inspection intrapulse multi-spectral measurements improve material discrimination, maximize penetration, and enhance contrast resolution while simultaneously reducing inspection time and dose to the environment, thus resulting in a smaller exclusion zone.

- In backscatter systems, the use of this method will increase penetration and improve image quality of concealed objects located deeper behind the wall. Specifically, different depths within an object can be probed simultaneously.

- For Computed Tomography, this approach mitigates the main disadvantages of the conventional dual-energy approach: a) distortion of image of the boundaries between regions with large difference in density; b) limited range of object thickness where material decomposition is valid; c) ambiguity and artifacts caused by sampling different regions due to motion of the object between interlaced pulses with distinct energies.

# Adaptive Rail-Cargo Inspection System, ARCIS

## *Conventional interlaced Dual Energy X-ray inspection method*

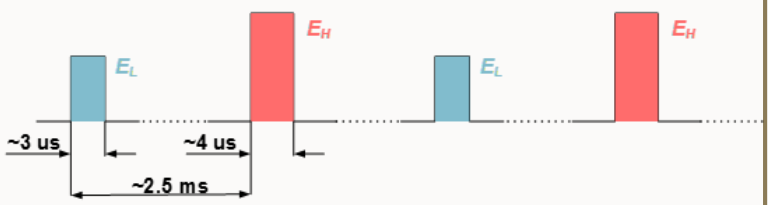


## *Novel, adaptively controlled Multi-Energy X-ray inspection method*

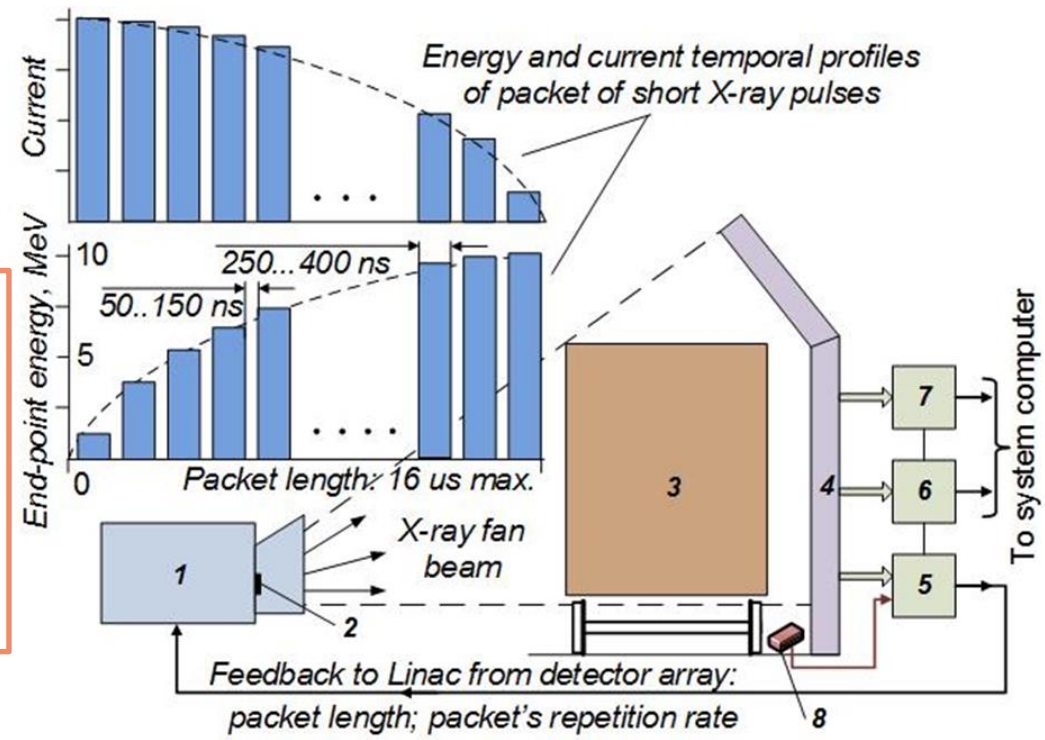


***ARCIS technical parameters that have already been demonstrated:***

- ***Material discrimination range of thickness, steel equivalent: 6 -250 mm;***
- ***Number of Z-groups of material discrimination: 4;***
- ***Penetration, steel equivalent: > 425 mm.***

***TRL: 6-7.***

***1*** - Electron linac; ***2*** – X-ray converter; ***3*** – Cargo under inspection; ***4*** – Linear array of fast detectors; ***5*** – Fast processor for linac control; ***6*** – Radiographic image processor; ***7*** – Material discrimination processor; ***8*** – Cargo speed sensor.


*A. Arodzero, S. Boucher, J. Hartzell, S. Kutsaev, R. C. Lanza, V. Palermo, S. Vinogradov, V. Ziskin. High Speed, Low Dose, Intelligent X-ray Cargo Inspection. Proceedings of 2015 IEEE NSS-MIC, paper N2B1-6.*

# ARCIS: Adaptive Material Discrimination

Packet of X-ray pulses with multiple end-point energies allow intelligent dual-energy material discrimination by choosing energy ranges based on measured areal density of the region of cargo sensed by detector pixel.

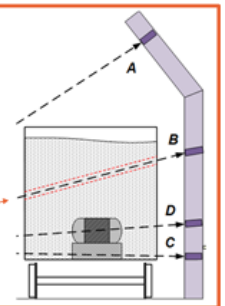


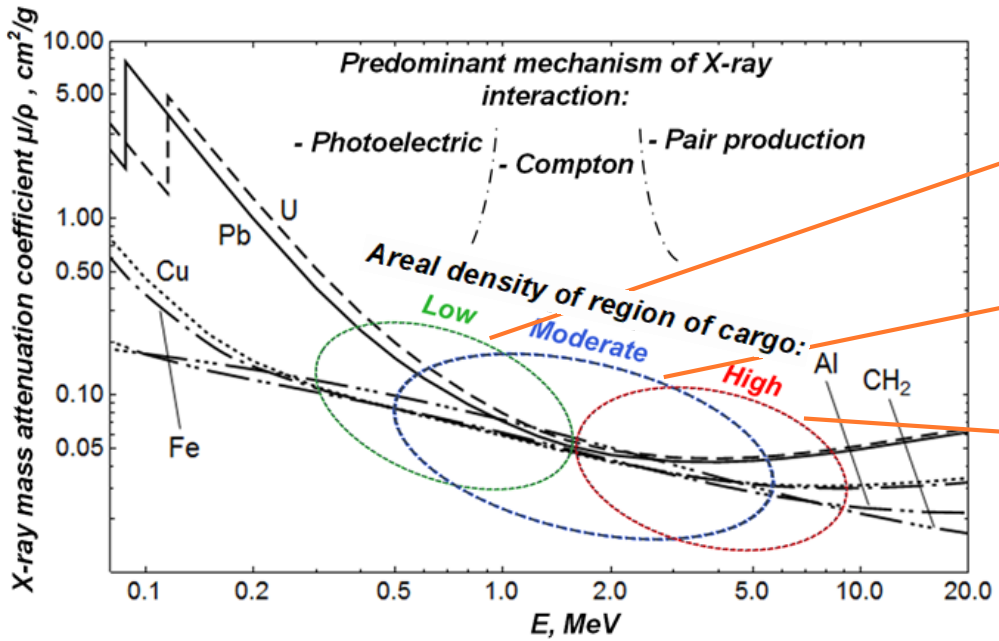


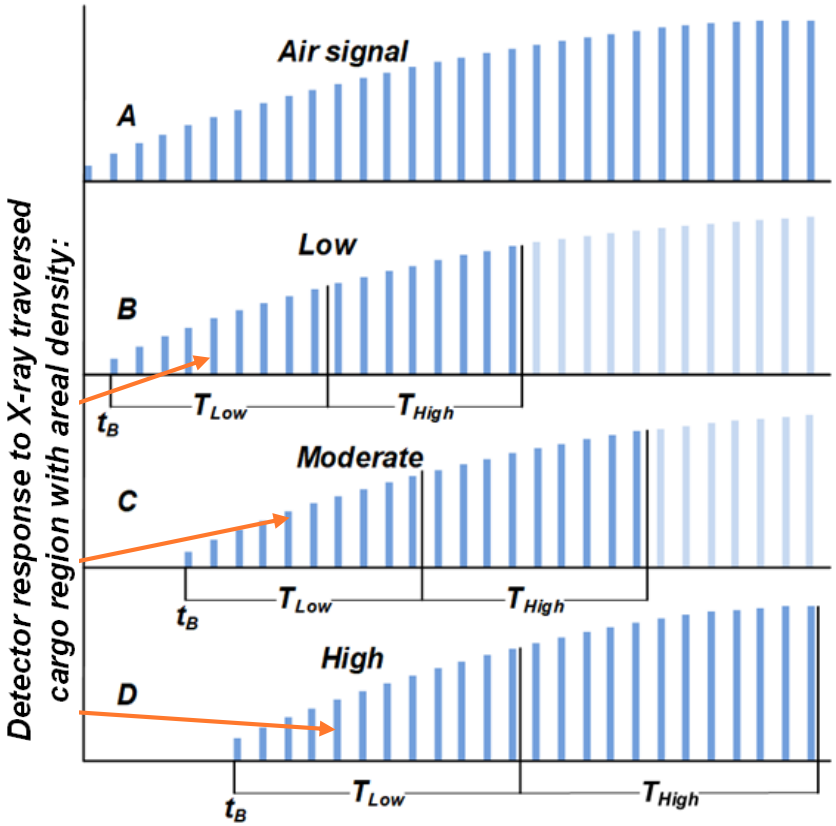


Selection of optimal energy ranges for dual energy material discrimination depends on areal density of region sensed by the detector pixel. A scenario for a 9-MeV cargo inspection system is presented.

# ARCIS: Prove of Concept System

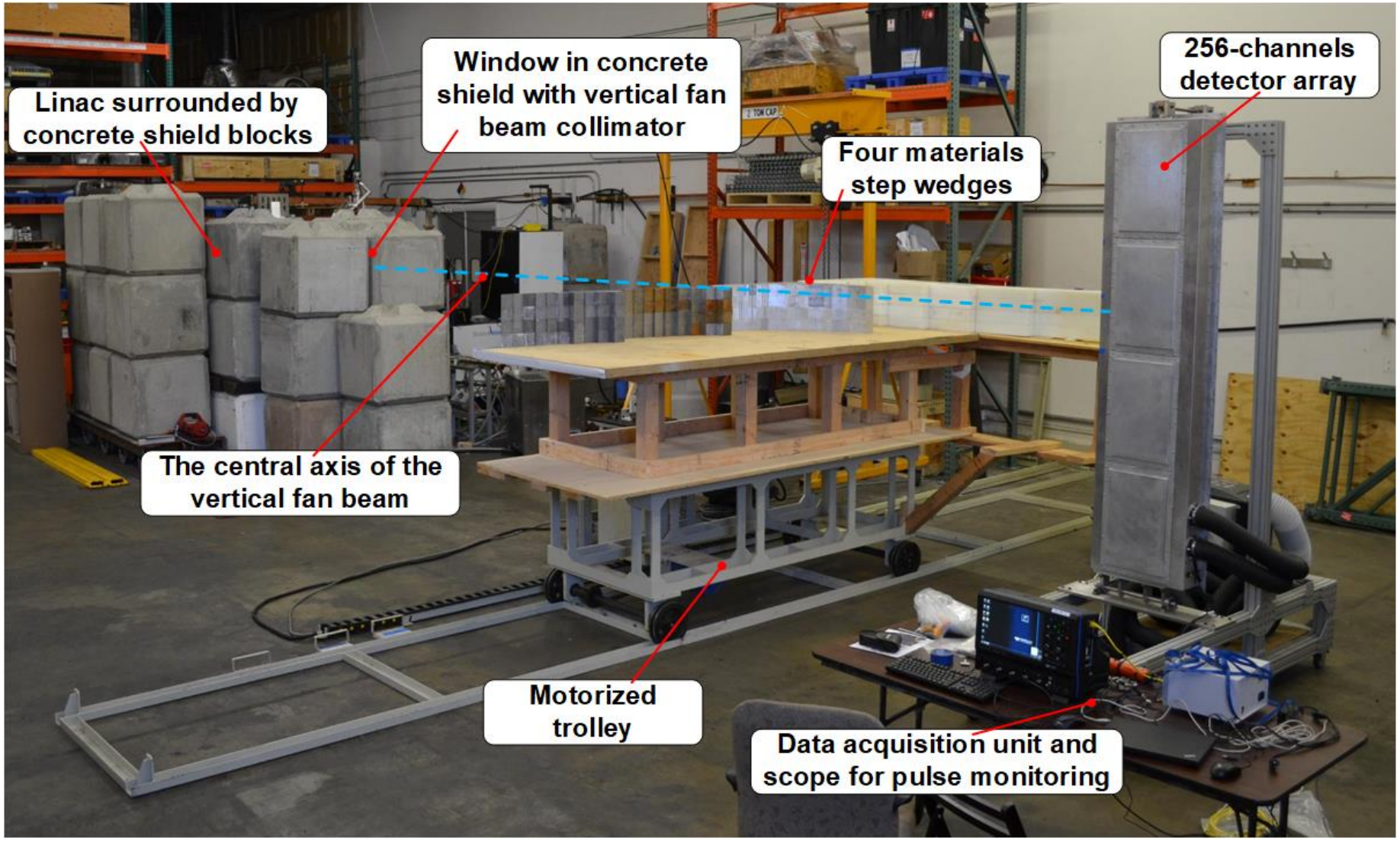

# ARCIS: Latest Results

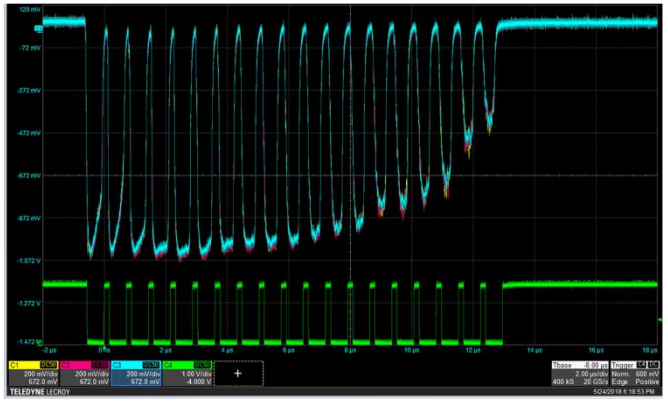

The response of 3 adjacent detector channels to a 14-microsecond packet of 19 X-ray pulses.

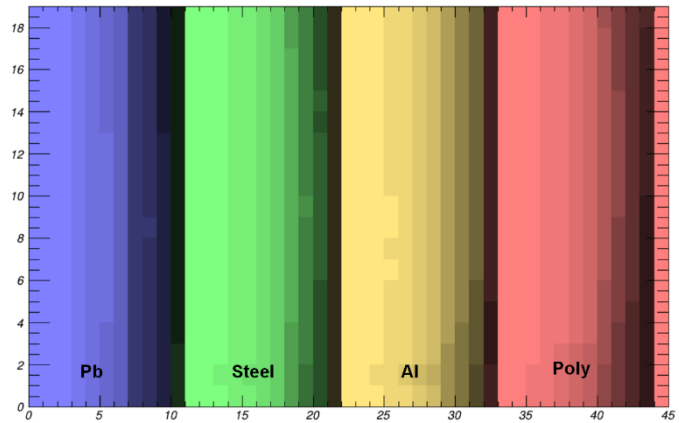


Color-coded image of four materials step wedges.

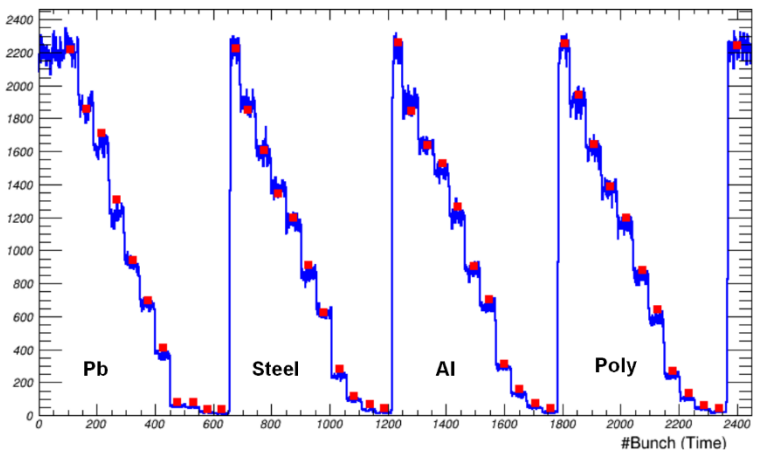


Transmission scan of four materials step wedges.

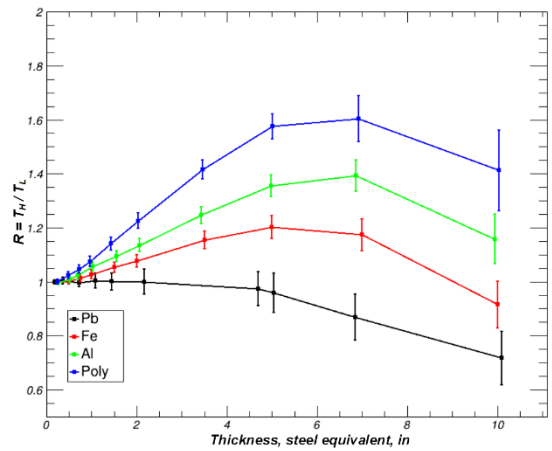


Material discrimination curves for four materials step wedges.

** Details: A. Arodzero, S. Boucher, S.V. Kutsaev, R.C. Lanza, V. Palermo, A. Yu. Smirnov, S. Vinogradov. Transmission Cargo Inspection with Ramping-Energy X-ray Pulses. CAARI-2018, Talk #146.*

# DeepBx: X-ray Backscatter Inspection with Enhanced Penetration and Material Discrimination

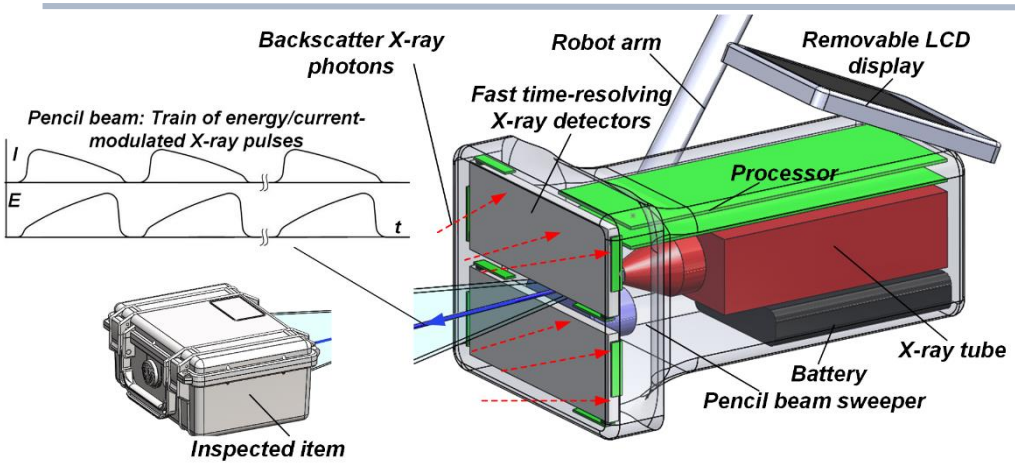


## Operational and Performance Capabilities

- Portable (<8 lb.), rapidly-mountable backscatter X-ray inspection system for robotic or handheld operations that provides deeper penetration, greater material discrimination, improved spatial resolution, and enhanced contrast of objects within the concealed volume.
- Two modes of operation: Fast search mode with scanning speed up to 7 inches/second and penetration up to 1/8 in of steel; Deep scan mode with penetration of 3/16 in of steel (at 80 keV max.), enhanced resolution and contrast of concealed internal objects and scanning speed 3.5 inches/sec.
- Removable high-resolution LCD for display of real time images.
- Human safe operation, dose rate does not exceed 2 mR/hr.

## Technical Approach

- One of the main factors limiting performance of conventional backscatter systems (penetration depths, spatial resolution, contrast of concealed objects) is the backscatter signal from front surface of inspected item.
- To overcome this fundamental limitation, we have developed an advanced concept for backscatter imagers that uses a pencil X-ray beam with a train of modulated energy/current pulses, fast, time-resolving X-ray detectors, and an algorithm of image "peeling" processing (US Patent App. 2017/0336526). By sequencing energy and current of the X-ray beam, we are able to separate the backscatter signals originating from the various depths of inspected item.
- The proposed concept represents an extension of the approach successfully demonstrated for transmission inspection systems (US Patent App. 2015/0338545).

**TRL: 4**

# Adaptive, Multi-Energy Computed Tomography (AMECT)

The AMECT approach for dual- (or, multi-) energy CT mitigates the main disadvantages of the conventional interlaced approach:

- Distortion of CT image of the boundaries between regions with large difference in *Z*;
- Small range of object thicknesses where material decomposition is valid;
- Ambiguity and artifacts in reconstructions caused by displacement of object between pulses in the conventional interlaced dual-energy method.

The key advantage of AMECT lies in each detector pixel's collecting multi-energy data over many different, selectable energy windows. This is different from the conventional dual-energy method with an energy-interlaced linac, where two energies are acquired by alternating accelerator energies, e.g., 6 MeV and 4 MeV.

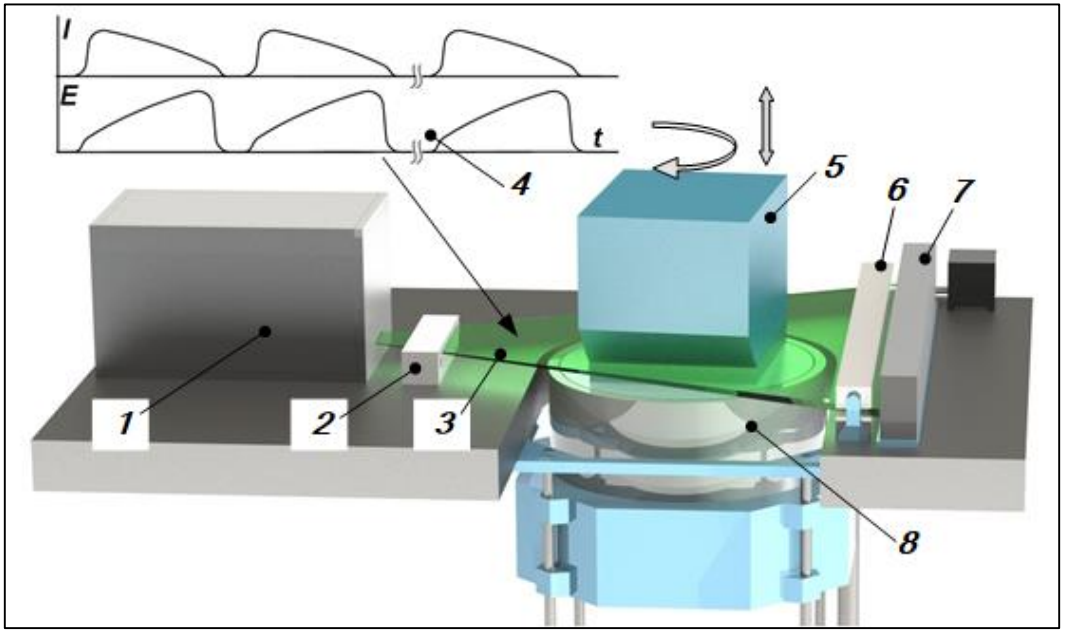


**Schematic layout of AMECT system, version for air cargo containers inspection.**
***1*** **- Linac;** ***2*** **- Precollimator;** ***3*** **– Collimated cone beam: a sequence of energy/current modulated X-ray pulses ;** ***4*** **– Temporal profile of X ray pulses;** ***5*** **– Air cargo container;** ***6*** **– Collimator;** ***7*** **– 2D array of fast detectors;** ***8*** **– Rotating elevator.**

Thus, our approach has two benefits: 1) for the same accelerator pulse rate, the scan rate can either be twice as fast (better throughput) or can be done with a lower dose; 2) accurate multi-energy decomposition in the projection domain is possible by utilizing the difference in Compton and pair-production attenuations of the X-ray beam. Material distribution maps in atomic number groups can be generated.

*Details: A. Arodzero, P. Burstein, R. Lanza: Adaptive Computed Tomography with modulated-energy X-ray pulses. Provisional Patent App. No. 62/575,403.*

***TRL: 4***

# Novel Linac-based X-ray Sources for Radiography and CT

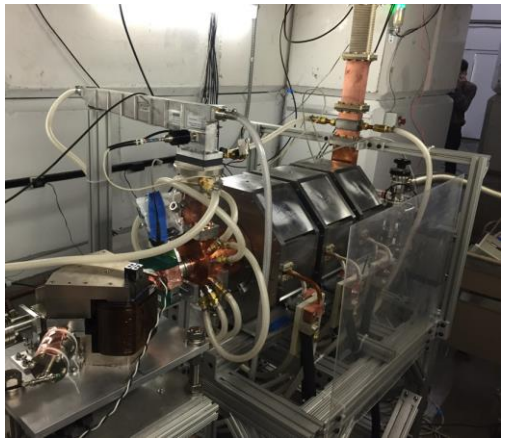

S-band 9 MeV linac with deep energy control.

RF pulse parameters

| | |
|---|---|
| RF power (peak) | 5 MW |
| RF pulse length | 16.3 µs |

Electron beam parameters

| | |
|---|---|
| Number of pulses in packet | 32 |
| Pulse duration | 400 ns |
| Pulse separation | 100 ns |
| Maximum rep. rate, pps | 1000 |
| Maximum duty factor | 0.016 |
| Beam energy ramping | 2 to 9 MeV |
| Beam current ramping | 1.3 to 0.13 A |
| Energy spread | < 1MeV |

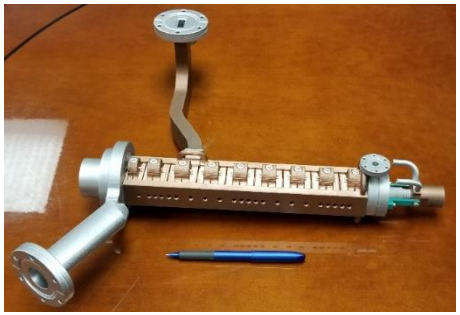

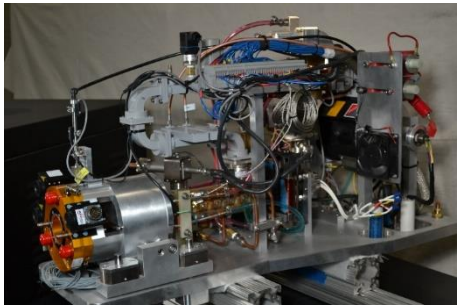

X-band 6 MeV linac.
Top: 3D printed model of accelerating structure.
Bottom: Assembled linac on the test bench.

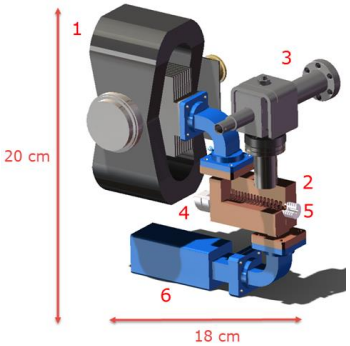


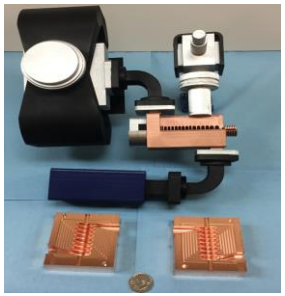

Ku-band 1 MeV micro-linac.
Left: 1- magnetron, 2 – split accelerating structure, 3 – vacuum pump, 4 – electron gun, 5 – X-ray converter, 6 – RF load.
Right: 1:1 scale 3D printed model with fabricated copper prototype halves.

*Details : S. Kutsaev, R. Agustsson, A. Arodzero, S. Boucher, P. Burstein, A. Yu. Smirnov. X-ray Sources for Adaptive Radiography and Computed Tomography. CAARI-2018, Talk # 41.*

# Detectors for Modulated-Energy X-ray Inspection Systems

Detectors for transmission radiography and high energy CT.
Top: 32-channel detector module.
Bottom: 256-channel linear detector array.

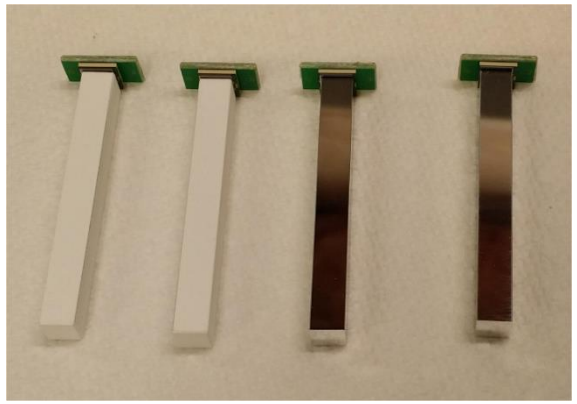

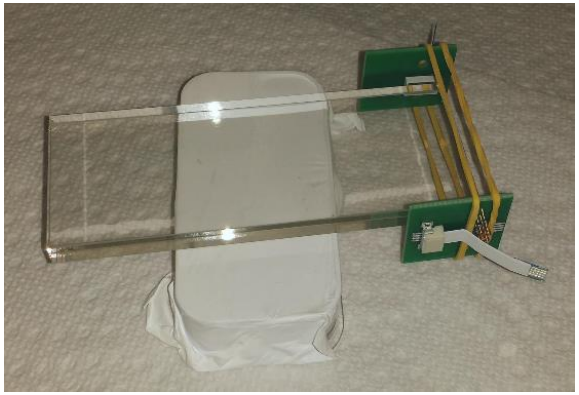

X-ray detectors based on Barium-fluorophosphate glass.
Top: Detector pixels for transmission radiography and high energy CT.
Bottom: Assembly of detector section for backscatter imager.

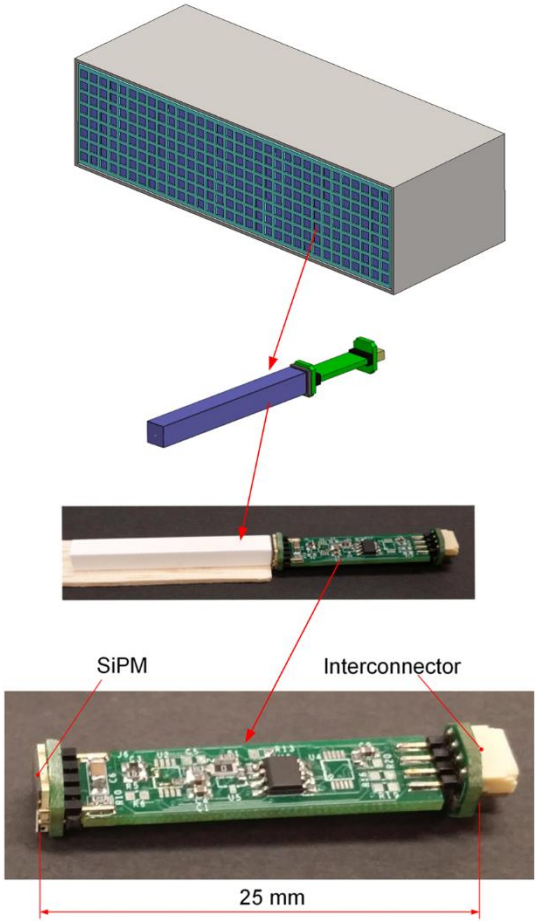


Prototype of 256- channel (32x8) detector module for high energy CT.

Thank you!